門扣

Gate step

DK-1856

商品介紹 Product description

由不銹鋼製成，經久耐用且耐腐蝕。

- ●材質：不鏽鋼(SUS304)
- ●表面處理：緞面拋光
- ●用途：特種車輛等

Made of stainless steel for durability and corrosion resistance.

- ●Material: Stainless(SUS304)
- ●Finish: Satin polishing
- ●Uses: Specially equipped vehicle,etc.

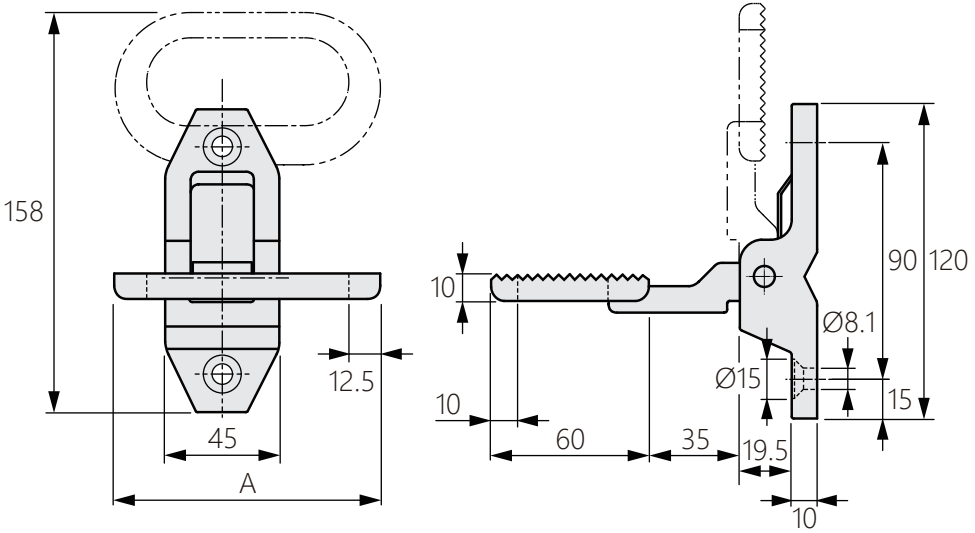

商品型號	A
DK-1856-1	105
DK-1856-2	160
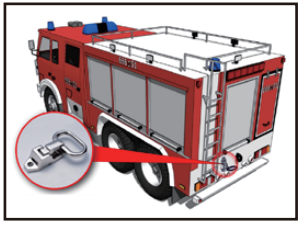
示意圖