垂直式快速夾鉗

Vertical quick clip

DK-8020H-5

商品介紹 Product description

1.迫緊點高度可調節，以適應門板、門框的不同高度。
2.壓把開啟角度=90度；手柄開啟角度=170度。

●材質：鐵(SPCC)
●表面處理：鍍鋅
●用途：電箱、電櫃、工業設備。

1. The height of the pressing point can be adjusted to adapt to the different heights of the door panel and door frame.
2. Press the handle opening angle=90 degrees; handle opening angle=170 degrees.
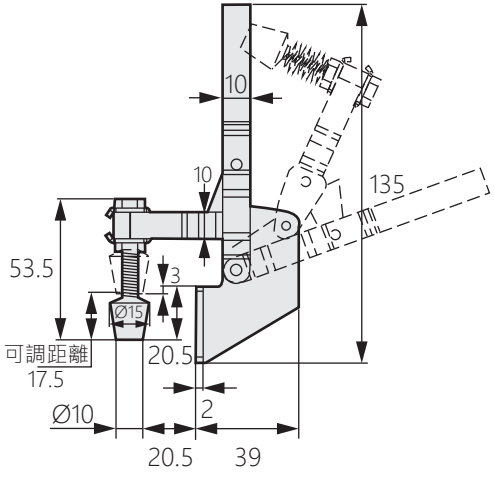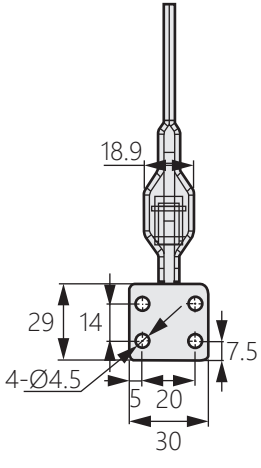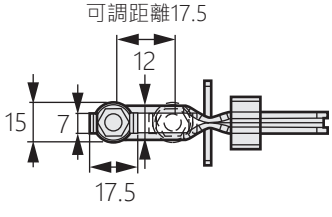
●Material: Iron (SPCC)
●Finish: Zinc plated
●Uses: Electric box,electric cabinet and industrial equipment.