不鏽鋼重型冷凍庫鉸鏈

Stainless steel heavy-duty freezer hinge

OH-0368

商品介紹 Product description

1.耐久性能的結構設計。
2.門板安裝後可微調，以適合不同的密封需求。
3.具升降功能，門開啟時會被抬高。
4.左裝右開型，可按示意圖自行調換安裝方向。

●材質：不鏽鋼(SUS304)
●表面處理：鏡面拋光
●用途：冷庫門、大型工業箱體等

1. Durable structural design.
2. The door panel can be fine-tuned after installation to suit different sealing requirements.
3. With lifting function, the door will be raised when it is opened.
4. Left-mount, right-open type, installation direction adjustable per diagram.
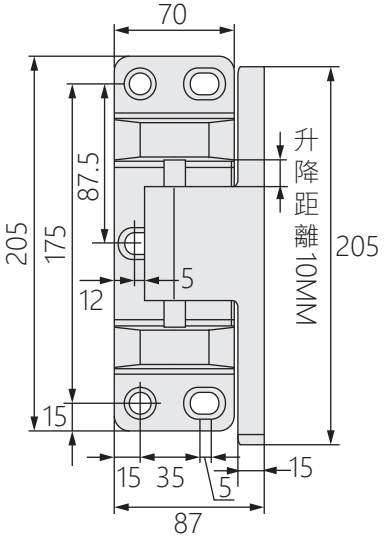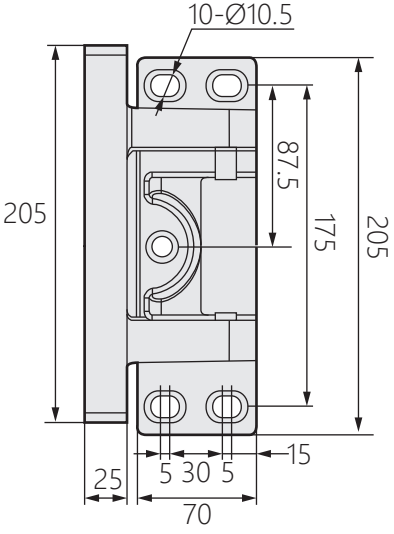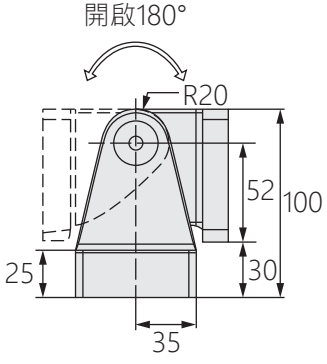
●Material: Stainless steel(SUS304)
●Finish: Mirror polishing
●Uses: Cold storage doors,large industrial cabinet.