重承載型鋁合金門鉸鏈

Heavy-duty aluminum alloy door hinges

CAD

OH-208

商品介紹 Product description

配置墊圈，使鉸鍊無間隙，可防止裝上門板後因負載重量而產生的傾斜。

●材質：主體-鋁合金、插銷-不鏽鋼
●表面處理：陽極處理黑色
●用途：視設計情況使用

Using washers to eliminate gaps in hinges prevents tilting due to door weight after installation.

●Material: Main body-Aluminum alloy
Latch – Stainless steel
●Finish: Anodized black
●Uses: Use according to design.

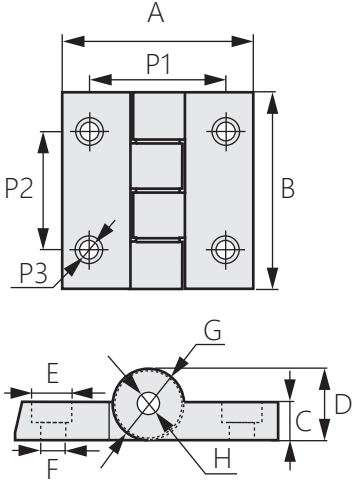

商品型號	A	B	C	D	E	F	G	H	P1	P2	P3
OH-208-1	70	90	10	19.5	10.5	6.5	18	6	47	72	M6
OH-208-2		75								54.5	M6
OH-208-3		50								30	M6
OH-208-4	40		6.5	13.5	9	5.5	13		26		M5
OH-208-5		30								16	M6