不鏽鋼鉸鏈

Stainless steel hinge

OH-321

商品介紹 Product description

1.由不鏽鋼製成，經久耐用且耐腐蝕。
2.負載荷重：50kgf。

●材質：不鏽鋼(SUS304)
●表面處理：拋光
●用途：專用車輛、環境檢測設備等

1.Made of stainless steel for durability and corrosion resistance.
2.Load capacity: 50kgf.
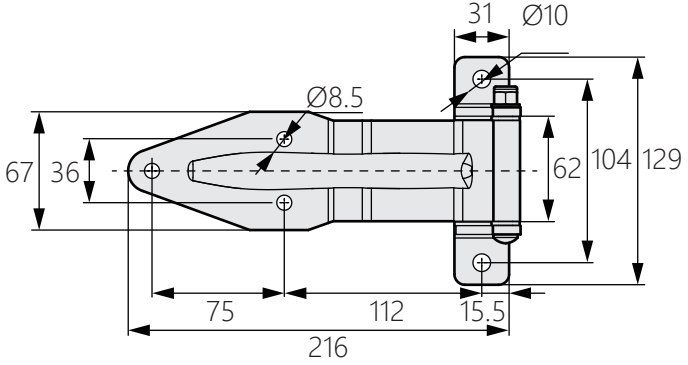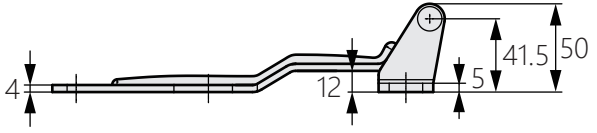
●Material: Stainless(SUS304)
●Finish: Polishing
●Uses: Specially equipped vehicle,environmental testing equipment,etc.