鋁製長排鉸鏈

Aluminum long row hinge

OH-332

商品介紹 Product description

1.高度耐腐蝕且重量輕。
2.使用樹脂襯套以防止產生顆粒。
3.可拆卸鉸鏈。

●材質：鋁合金(ALDC)
●表面處理：陽極氧化、白色噴漆
●用途：IT設備、測量儀器等

1.It is highly corrosion resistant and light.
2.Use of resin bushes to prevent particles from occurring.
3.Detachable hinge.

●Material: Aliminium alloy(ALDC)
●Finish: Anodizing,white painting
●Uses: It equipment,measuring instrument,etc.

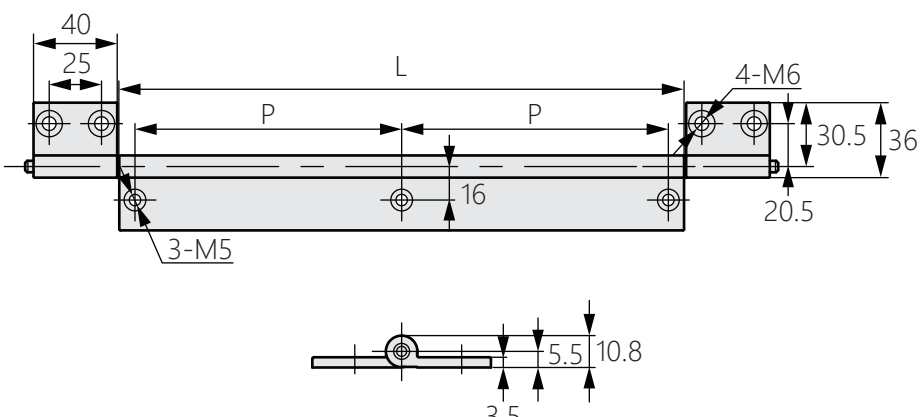

商品型號	L	P
OH-332-1	148	66.5
OH-332-2	270	127.5
OH-332-3	497	241
OH-332-4	505	245
OH-332-5	510	247.5
OH-332-6	643	314
OH-332-7	784	384.5