圓形把手

Round handle

TG-511

商品介紹 Product description

帶底座圓形把手。

●材質：不鏽鋼、鐵
●表面處理：TG-511-1：鉻
TG-511-2：鏡光
●備註：全尺寸皆有底座，如需底座請於型號加上"Z"。

●Material: Stainless steel、iron
●Finish: TG-511-1: chromium
TG-511-2: mirror
●Notes: All sizes have a base, if you need a base, please add "Z".

商品型號		L	D	H	M	C	J	H3	H4
不鏽鋼	鐵								
TG-511-1-1	TG-511-2-1	40	Ø6	22	M4	7	Ø4.5	1.5	3.5
TG-511-1-2	TG-511-2-2	60							
TG-511-1-3	TG-511-2-3	55		26		8			
TG-511-1-4	TG-511-2-4	60							
TG-511-1-5	TG-511-2-5	82							
TG-511-1-6	TG-511-2-6	70		32		10			
TG-511-1-7	TG-511-2-7	80							
TG-511-1-8	TG-511-2-8	90							
TG-511-1-9	TG-511-2-9	100							
TG-511-1-10	TG-511-2-10	102							
TG-511-1-11	TG-511-2-11	122							
TG-511-1-12	TG-511-2-12	138							
TG-511-1-13	TG-511-2-13	45		43		8			
TG-511-1-14	TG-511-2-14	66							
TG-511-1-15	TG-511-2-15	68	Ø7	30	M5				
TG-511-1-16	TG-511-2-16	60	Ø8	32		10	Ø5.5		
TG-511-1-17	TG-511-2-17	90							
TG-511-1-18	TG-511-2-18	100							

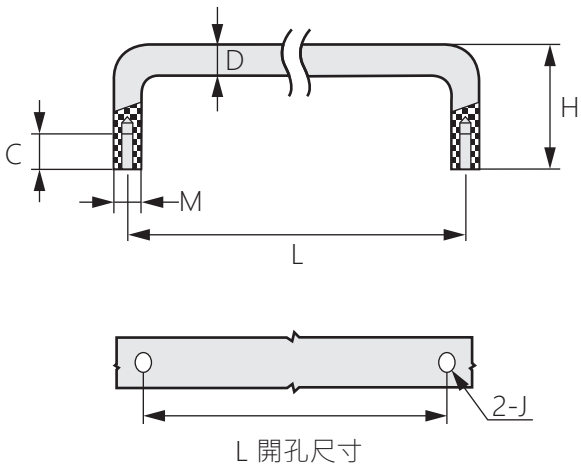

【底座選配使用】

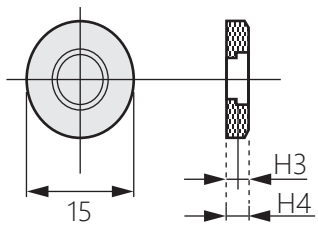

商品型號		L	D	H	M	C	J	H3	H4
不鏽鋼	鐵								
TG-511-1-19	TG-511-2-19	120	Ø8	32	M5	10	Ø5.5	1.5	3.5
TG-511-1-20	TG-511-2-20	75		40					
TG-511-1-21	TG-511-2-21	150							
TG-511-1-22	TG-511-2-22	48		45	M4	8	Ø4.5		
TG-511-1-23	TG-511-2-23	66							
TG-511-1-24	TG-511-2-24	90	Ø9	32	M5	10	Ø5.5		
TG-511-1-25	-	100		30		8	-	-	-
TG-511-1-26	TG-511-2-25			32		10	Ø5.5	1.5	3.5
TG-511-1-27	-			50		8	-	-	-
TG-511-1-28	TG-511-2-26	135		32		10	Ø5.5	1.5	3.5
TG-511-1-29	TG-511-2-27	155							
TG-511-1-30	TG-511-2-28	119		40					
TG-511-1-31	TG-511-2-29	149							
TG-511-1-32	TG-511-2-30	160							
TG-511-1-33	TG-511-2-31	100		50					
TG-511-1-34	TG-511-2-32	80	Ø10	37					
TG-511-1-35	TG-511-2-33			60					
TG-511-1-36	-	88		42		12	-	1	2.2
TG-511-1-37	TG-511-2-34	100		37		10	Ø5.5	1.5	3.5
TG-511-1-38	TG-511-2-35			60					
TG-511-1-39	-			42		12	-	1	2.2
TG-511-1-40	TG-511-2-36	110		37		10	Ø5.5	1.5	3.5
TG-511-1-41	-			40	M6	8	-	-	-
TG-511-1-42	TG-511-2-37					10	Ø7	1.5	3.5
TG-511-1-43	TG-511-2-38			60	M5		Ø5.5		
TG-511-1-44	TG-511-2-39	120		37					
TG-511-1-45	-			40	M6	8	-	-	-
TG-511-1-46	TG-511-2-40					10	Ø7	1.5	3.5
TG-511-1-47	-			42		12	-	1	2.2
TG-511-1-48	TG-511-2-41			60	M5	10	Ø5.5	1.5	3.5
TG-511-1-49	TG-511-2-42	128		35	M4		Ø4.5		
TG-511-1-50	TG-511-2-43	160							
TG-511-1-51	TG-511-2-44			37	M5		Ø5.5		
TG-511-1-52	TG-511-2-45			60					
TG-511-1-53	-	180		42		12	-	1	2.2
TG-511-1-54	TG-511-2-46	200		37		10	Ø5.5	1.5	3.5
TG-511-1-55	TG-511-2-47			60					
TG-511-1-56	-			42		12	-	1	2.2
TG-511-1-57		235							
TG-511-1-58	TG-511-2-48	150	Ø12	50	M8	10	Ø9	1.5	3.5
TG-511-1-59	-					12	-	-	-
TG-511-1-60	TG-511-2-49			52		10	Ø9	1.5	3.5
TG-511-1-61	TG-511-2-50			87					