不鏽鋼迫緊圓頭鎖

Stainless steel tight round head lock

TM-063D-2

商品介紹 Product description

密封性能良好。

- ●材質：不鏽鋼304
- ●表面處理：拉絲拋光
- ●用途:高等電力箱、控制箱、自動化設備使用的箱體

Good sealing performance.
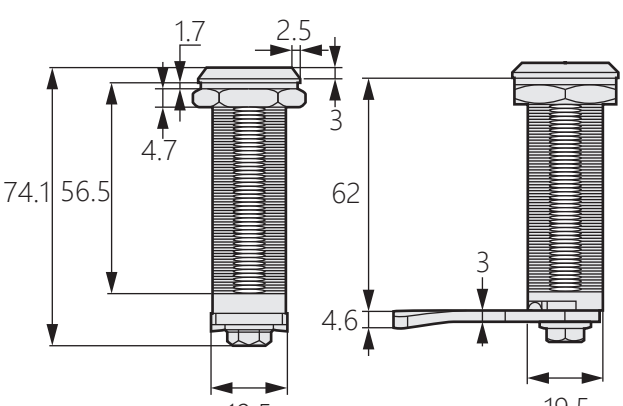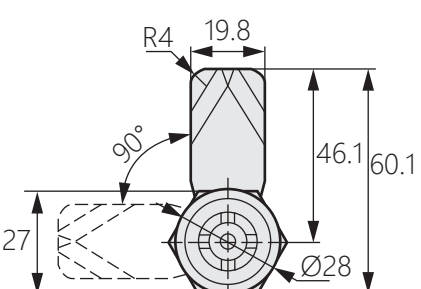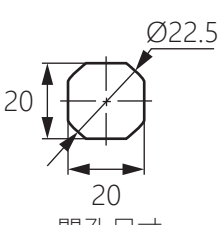
- ●Material: Stainless steel 304
- ●Finish: Brushed and polished
- ●Uses: Boxes used in higher power boxes, control boxes,and automation equipment.