防水迫緊門扣

Rotation type compression latch

TM-814

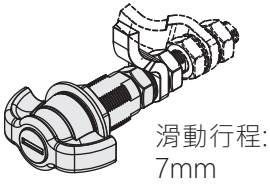

〔TM-814-1〕有鎖

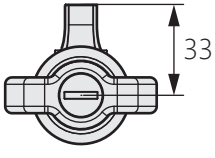

〔TM-814-2〕無鎖

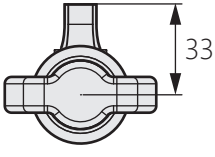

商品介紹 Product description

適用於防震動、密封、高品質的組件，能快速安全關閉門板。迫緊動作可將門板及門框拉緊，以確保密封狀態，並有助於減少或消除因震動所導致的噪音以及撞擊聲，更可防止其導致的意外開啟。

1.適用板厚:1-18mm
2.門擋片迫緊行程:7mm

- 材質：主體(鋅合金)、擋片(鐵)
- 表面處理：主體(黑色塗裝)、擋片(鍍鋅)

Designed for quick, secure closure in applications where vibration, sealing, and quality are paramount. The compression action provides environmental sealing in gasket applications, and helps reduce or eliminate noise and rattles caused by vibration. And also resists accidental opening due to shock or vibration.

1.Applicable door thickness is 1-18mm.
2.Compression Distance: 7 mm
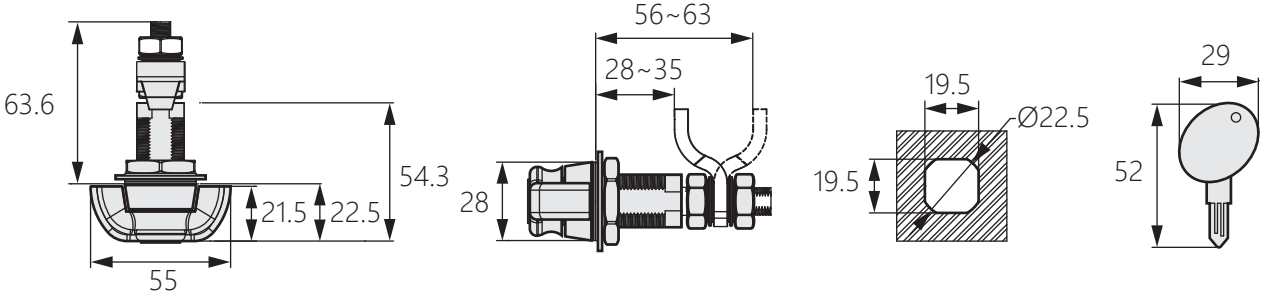
- Material: Main Body(Zinc Alloy)/Cam(Steel)
- Finish: Main Body(Black Powder Coated)
  Cam(Zinc Plated)